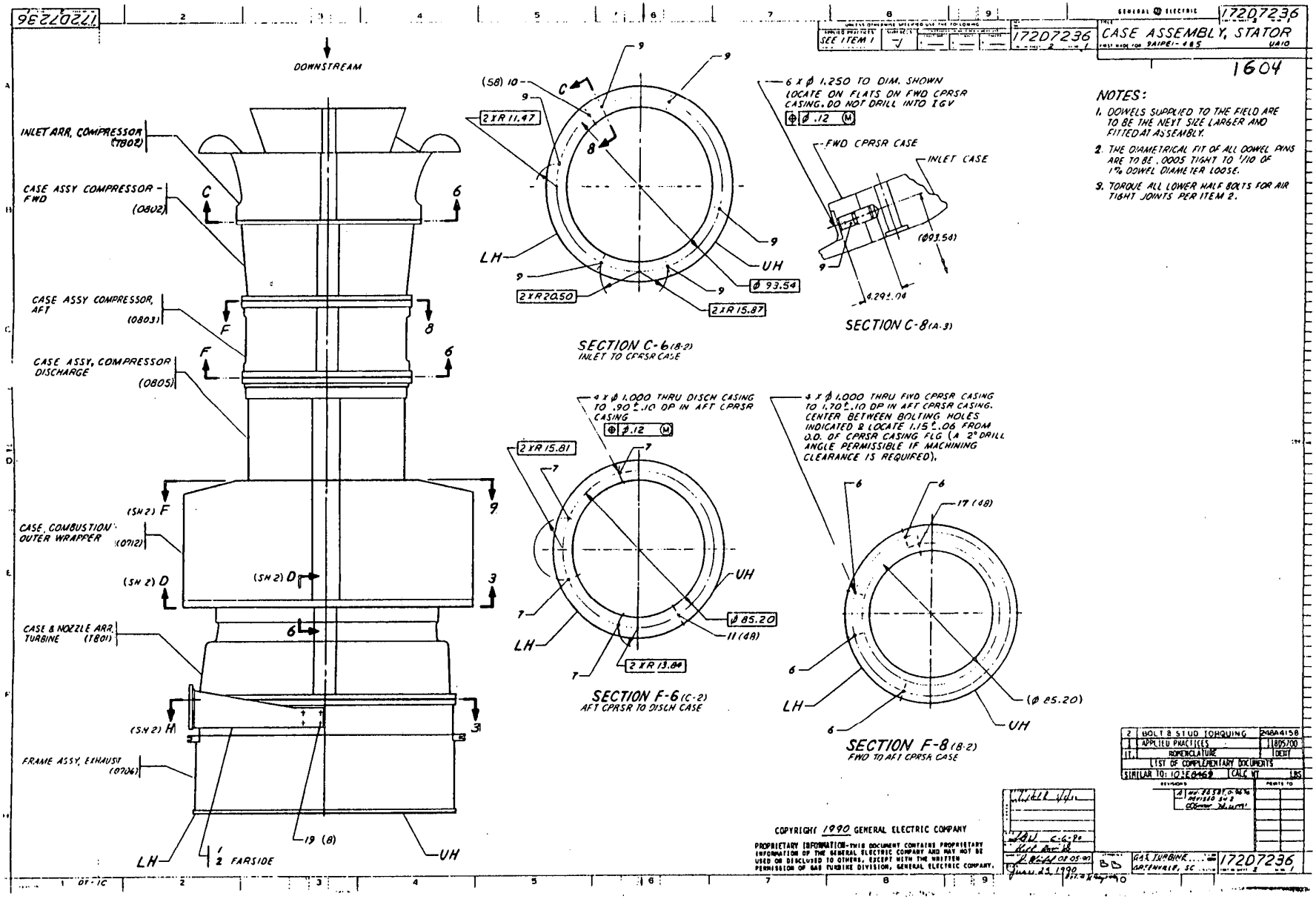
17207236
GENERAL ELECTRIC
CASE ASSEMBLY, STATOR
SEE ITEM 1
DOWNSTREAM
INLET ARR, COMPRESSOR (1802)
CASE ASSY COMPRESSOR - FWD (0802)
CASE ASSY COMPRESSOR, AFT (0803)
CASE ASSY, COMPRESSOR DISCHARGE (0805)
CASE, COMBUSTION OUTER WRAPPER (0712)
CASE & NOZZLE ARR. TURBINE (1801)
FRAME ASSY, EXHAUST (0706)
(SH 2) F
(SH 2) D
(SH 2) M
LH
UH
1/2 FARSIDE
19 (8)
(58) 10
2 X R 11.47
2 X R 20.50
2 X R 15.87
Ø 93.54
SECTION C-6 (B-2)
INLET TO CPRSR CASE
6 X Ø 1.250 TO DIM. SHOWN LOCATE ON FLATS ON FWD CPRSR CASING. DO NOT DRILL INTO IGV
Ø .12 M
FWD CPRSR CASE
INLET CASE
(Ø93.54)
0.29±.04
SECTION C-8 (A-3)
4 X Ø 1.000 THRU DISCH CASING TO .90±.10 DP IN AFT CPRSR CASING
Ø .12 M
2 X R 15.81
Ø 85.20
11 (48)
2 X R 13.84
SECTION F-6 (C-2)
AFT CPRSR TO DISCH CASE
4 X Ø 1.000 THRU FWD CPRSR CASING TO 1.70±.10 DP IN AFT CPRSR CASING. CENTER BETWEEN BOLTING HOLES INDICATED & LOCATE 1.15±.06 FROM O.D. OF CPRSR CASING FLG (A 2° DRILL ANGLE PERMISSIBLE IF MACHINING CLEARANCE IS REQUIRED).
17 (48)
(Ø 85.20)
SECTION F-8 (B-2)
FWD TO AFT CPRSR CASE
NOTES:
1. DOWELS SUPPLIED TO THE FIELD ARE TO BE THE NEXT SIZE LARGER AND FITTED AT ASSEMBLY.
2. THE DIAMETRICAL FIT OF ALL DOWEL PINS ARE TO BE .0005 TIGHT TO 1/10 OF 1% DOWEL DIAMETER LOOSE.
3. TORQUE ALL LOWER HALF BOLTS FOR AIR TIGHT JOINTS PER ITEM 2.
2 BOLT & STUD TORQUING 2488A4158
1 APPLIED PRACTICES 1805700
NOMENCLATURE
LIST OF COMPLEMENTARY DOCUMENTS
SIMILAR TO: 1036469
CALC WT LBS
COPYRIGHT 1990 GENERAL ELECTRIC COMPANY
PROPRIETARY INFORMATION-THIS DOCUMENT CONTAINS PROPRIETARY INFORMATION OF THE GENERAL ELECTRIC COMPANY AND MAY NOT BE USED OR DISCLOSED TO OTHERS, EXCEPT WITH THE WRITTEN PERMISSION OF GAS TURBINE DIVISION, GENERAL ELECTRIC COMPANY.
GAS TURBINE
GREENVILLE, SC
17207236

172D7236

GENERAL ELECTRIC 172D7236

SEE ITEM 1 | 172D7236 | CASE ASSEMBLY, STATOR

1604

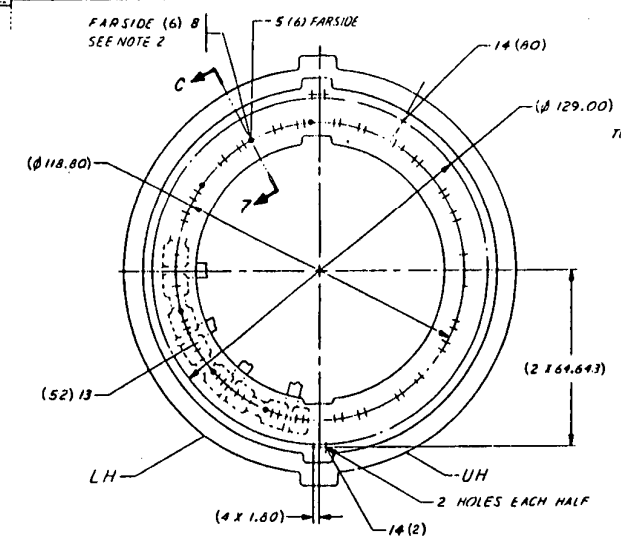

SECTION D-3 (E-2, SH1)
COMB WRAPPER & DISCH CASE TO TURB CASE

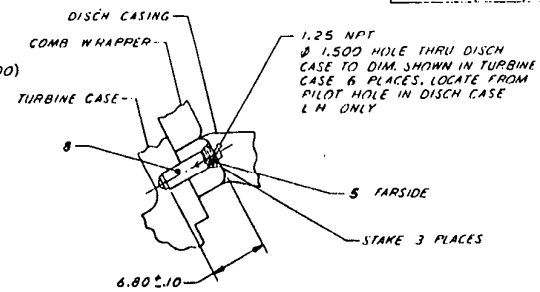

SECTION C-7 (A-2)

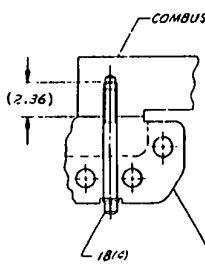

SECTION D-6 (F-3, SH1)

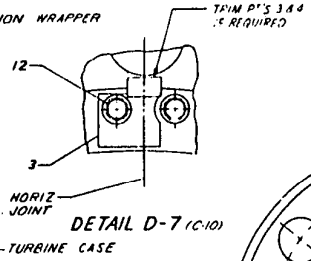

DETAIL D-7 (C-10)

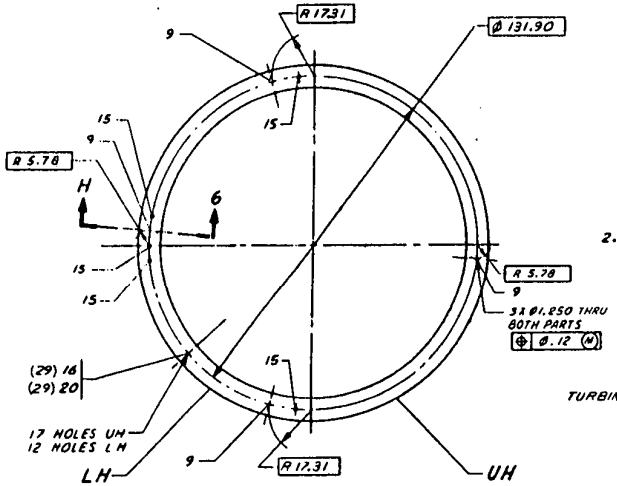

SECTION H-3 (F-2, SH1)
TURBINE CASE TO EXHAUST FRAME

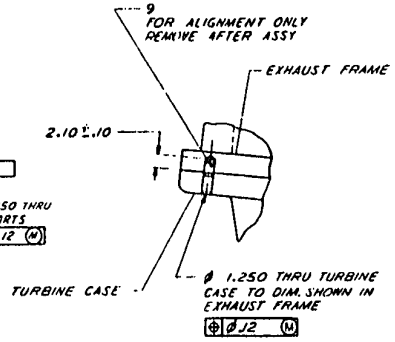

SECTION H-6 (F-2)

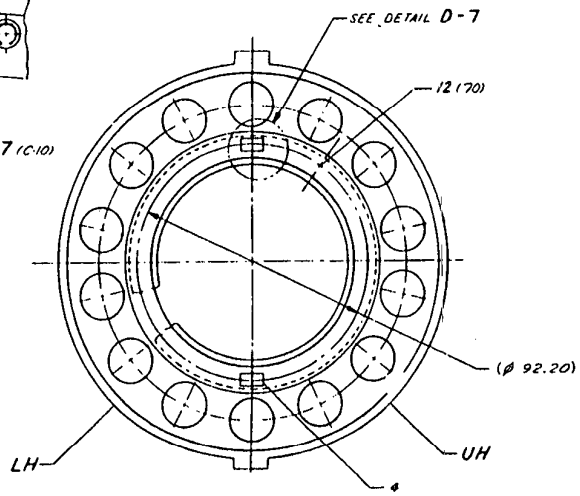

SECTION F-9 (D-2, SH1)
DISCHARGE CASE TO COMBUSTION WRAPPER

REVISIONS		PRINTS TO
A	NU-26582, 0.9010 COSmow DA 6-1991	

COPYRIGHT 1990 GENERAL ELECTRIC COMPANY

PROPRIETARY INFORMATION - THIS DOCUMENT CONTAINS PROPRIETARY INFORMATION OF THE GENERAL ELECTRIC COMPANY AND MAY NOT BE USED OR DISCLOSED TO OTHERS, EXCEPT WITH THE WRITTEN PERMISSION OF GAS TURBINE DIVISION, GENERAL ELECTRIC COMPANY.

June 12, 1990 | P.B. | GAS TURBINE GREENVILLE, SC | 172D7236